Lay In Diffuser DPCA Steel / DPCL Aluminium

SPIRO DUCT + FITTINGS + GRILLES + DIFFUSERS + FILTERS + FLEXIBLE DUCT + ACCESORIES

Lay In diffuser with a shock plaque and 360° pattern, R 4.2 insulated back pan (fiberglass with foil scrim vapor barrier) Optional R6.

1 Prinicipal Features

Materials:
Steel (DPCA) or Aluminium (DPCL)

Sizes:
6”-14” neck size available with 3” collar

Finish:
Electrostatic powder coating

Applications:
For false ceiling mounting in: Residences, Stores, Offices.

2 Views

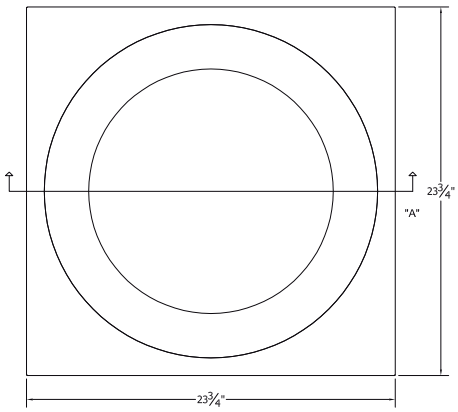

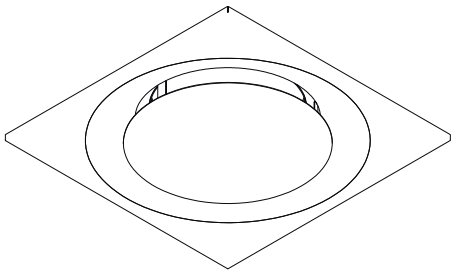

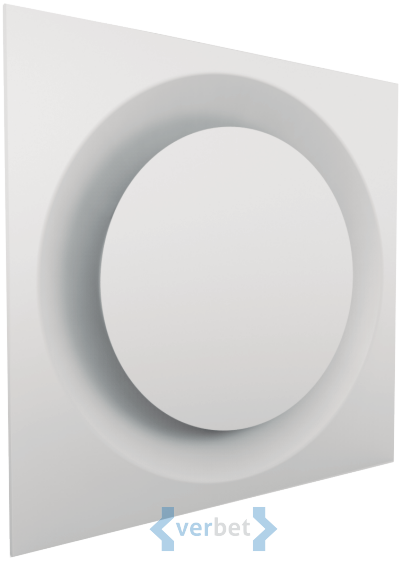

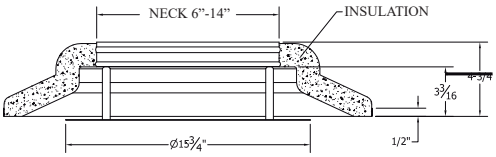

PACKAGING:
Airtight plastic packaging.

Lay In Diffuser DPCA Steel / DPCL Aluminium

SPIRO DUCT + FITTINGS + GRILLES + DIFFUSERS + FILTERS + FLEXIBLE DUCT + ACCESORIES
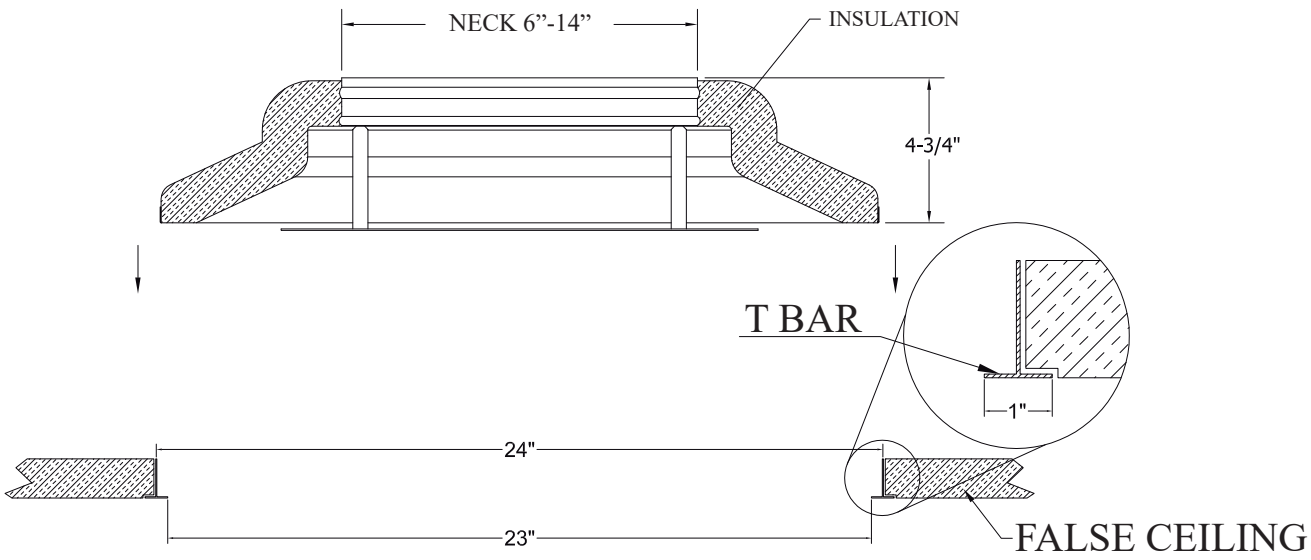
3 Mounting